Aurora VLSI

Unleashing the Power of the Internet

AU-MB2001: 3 Port SDRAM Controller AMBA Subsystem Core

AMBA AHB Bus SDRAM Controller

The AU-MB2001 SDRAM Controller AMBA Subsystem provides a three port SDRAM Controller peripheral subsystem for AMBA based SOCs. It contains an SDRAM Controller that connects seamlessly to the AMBA AHB Bus as an AMBA Bus slave, and also has two additional generic SDRAM request ports. The SDRAM Controller AMBA Subsystem Core is available as a synthesizable Verilog model from Aurora VLSI, Inc. Contact CustomerService@auroravlsi.com.

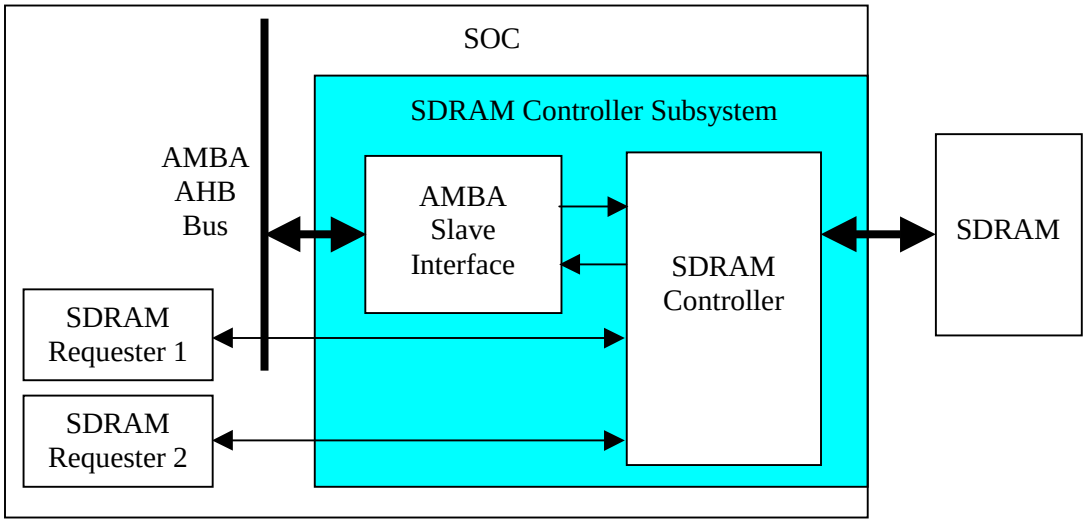

The SDRAM Controller Subsystem includes a pipelined, high performance SDRAM Controller. The SDRAM data bus width is user configurable to 32 or 64 bits. The SDRAM Controller supports SDRAM memory systems from 4 Mbytes to 4 Gbytes. SDRAM timing parameters are software programmable to support a wide range of SDRAM speed grades and clock frequencies. Refresh is initiated by the SDRAM Controller according to the software programmable refresh interval. To conserve power the SDRAMs can be put in low power mode.

Internal to an SOC, the SDRAM Controller Subsystem is a bus slave peripheral on the AMBA AHB Bus. The SDRAM Controller Subsystem can interface to either a 32 bit or 64 bit AMBA AHB Bus. A Verilog parameter indicates the AMBA Bus width. AMBA Bus transactions that target the SDRAMs, are recognized by the AMBA Slave Interface of the SDRAM Controller Subsystem. The AMBA Slave Interface then initiates an SDRAM request at the requester interface of the SDRAM Controller block. To complete the transaction, the AMBA Slave Interface drives the appropriate AMBA response onto the AMBA Bus.

Additionally, two other SDRAM users can access SDRAM through the two independent Generic SDRAM Requester Interfaces of the SDRAM Controller Subsystem. Each of these Generic SDRAM Request Interfaces has a simple request/ready protocol to issue SDRAM requests to the SDRAM Controller Subsystem. Write data is sent to the SDRAM Controller Subsystem using a

AMBA is a trademark of ARM Limited

simple valid/ready protocol. A valid/ready protocol is also used to return read data to the requester.

Round robin arbitration is used to choose the highest priority requester among the AMBA Slave Interface and two generic requester interfaces. Its request is then sent to the SDRAM interface.

The SDRAM Controller Subsystem supports one, two, or four SDRAM banks (external banks) in SDRAM memory systems through its SDRAM chip select outputs- sdram_cs[3:0]. The SDRAM data bus, control lines, and clock are common to all banks of SDRAM.

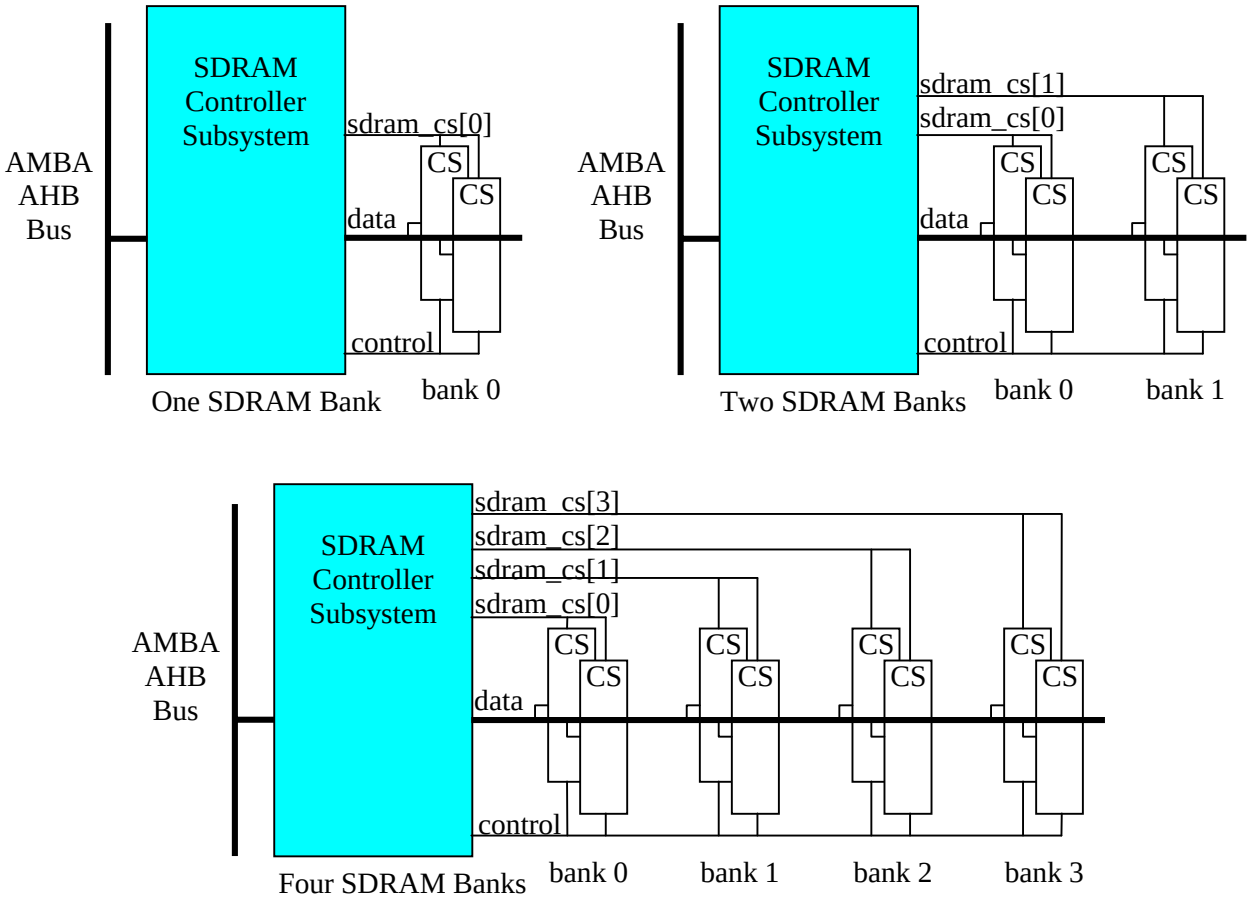

SDRAM Controller AMBA Subsystem features are summarized:

SDRAM Controller

- 32 bit or 64 bit SDRAM data bus
- 4 Mbyte to 4 Gbyte SDRAM memory system
- Pipelined accesses to active rows for highest performance
- 2 or 3 cycle CAS latency
- 1, 2, or 4 banks of SDRAM
- 2 or 4 SDRAM internal banks
- 8, 9, 10, 11, or 12 column address bits
- 11, 12, or 13 row address bits
- SDRAM powerdown supported
- Fully programmable SDRAM timing parameters
- Auto-refresh with programmable SDRAM refresh interval

AMBA Slave Interface

- AMBA AHB Bus slave
- 32 bit or 64 bit AMBA AHB Bus- user configurable
- Supports all required AMBA AHB Bus features
- Implements AMBA Bus timeout and RETRY response
- Read data prefetching
- Write data packing
- Same cycle device request/response is supported for highest throughput
- Handles all data packing/unpacking and data alignment for data transfer sizes that do not match the AMBA Bus width and/or SDRAM data bus width
- User configurable for big or little endian AMBA Bus and memory
- AMBA Bus and SDRAM interface can be asynchronous to each other

Generic Requester Interfaces

- 2 generic SDRAM requester interfaces
- 64 bit data
- Request/ready protocol to issue an SDRAM request
- Data valid/ready protocol to transfer data
- Round robin arbitration between each Generic Requester Interface and the AMBA Slave Interface

The core is delivered as a synthesizeable RTL Verilog model. Deliverables include:

- RTL Verilog source code model of the core
- Verilog testbench and test cases
- Synthesis scripts examples
- Complete detailed documentation and training class notes

AMBA is a trademark of ARM Limited

SDRAM Controller

The SDRAM Controller Subsystem includes the AU-M2001 SDRAM Controller Core. Additional logic at the requester interface of the SDRAM Controller provides an AMBA Bus slave interface, read prefetching logic, and write data packing.

The SDRAM Controller accepts SDRAM requests from the AMBA Slave Interface, and compares the request address to addresses of all active rows. If the request address falls in an active row, the request goes directly to the SDRAMs without stalling the SDRAM Controller pipeline. This results in a peak bandwidth of 4 bytes/cycle with a 32 bit SDRAM data bus, and 8 bytes/cycle with a 64 bit SDRAM data bus. Once a row is activated, it is left activated so that the maximum amount of requests are to active rows, resulting in highest performance.

The number of row address bits, column address bits, bank address bits, and the SDRAM banks is software configurable. Eight to twelve column address bits are supported. The number of row address bits can be set to eleven, twelve, or thirteen. SDRAMs with either two or four internal banks are supported. One, two, or four banks of SDRAM (external banks) can be built into the system. The SDRAM chip select pins are used to identify the accessed bank of SDRAM. This flexibility permits SDRAM memory system of 4 Mbytes to 4 Gbytes.

SDRAM timing parameters are software programmable. This allows the SDRAM Controller to be used with a wide range of SDRAM speed grades and cycle times. CAS latency is also software programmable.

The SDRAM refresh interval is software programmable. Each time the refresh interval expires, the SDRAM Controller performs an auto-refresh cycle to all SDRAM internal and external banks.

Upon reset, SDRAM accesses are disabled. After programming the SDRAM Controller registers to configure the SDRAM system- sizes, timing parameters, CAS latency, etc., software enables SDRAM accesses. Once enabled, the SDRAM controller loads the SDRAMs' Mode Registers, performs the appropriate refresh cycles, and is then ready to accept SDRAM read and write requests.

The user may put the SDRAMs into low power mode through software. The SDRAM Controller continues to initiate refresh cycles while the SDRAMs are powered down. Low power mode is exited when a read/write request occurs or when software exits low power mode.

AMBA is a trademark of ARM Limited

AMBA Slave Interface

The AMBA Slave Interface of the SDRAM Controller Subsystem, accepts SDRAM requests from the AMBA Bus. The AMBA Slave Interface supports all required AMBA AHB Bus features including all AMBA burst and wrapping types, AMBA sizes up to the AMBA Bus width, and all AMBA Bus responses. When the AMBA Bus data transfer size does not match the AMBA Bus width or SDRAM data bus width, the AMBA Slave Interface packs and/or unpacks the data and aligns the data, for the most efficient transfer of data to/from the SDRAMs and to/from the AMBA Bus.

The AMBA Slave Interface can respond in the cycle after it receives an AMBA Bus request. This ensures a slave response on the AMBA Bus with no wait states, and therefore highest system performance. To support this fast response time, read data is prefetched whenever possible.

Typically, the SDRAMs and the AMBA Bus do not run at the same clock rate. The AMBA Bus and SDRAM interface can be completely asynchronous to each other due to the two independent clock domains of the SDRAM Controller Subsystem. One clock domain includes the AMBA Bus interface logic. The SDRAM interface logic is in the second clock domain. These two clock domains come together in the AMBA Slave Interface block. Each clock domain has its own SDRAM Controller Subsystem clock input.

Generic Requester Interfaces

The Generic Requester Interfaces are used to directly issue SDRAM access requests to the SDRAM Controller Subsystem. Each SDRAM request includes the SDRAM address, number of bytes to be accessed, read/write directionality, and first write data if the request is an SDRAM write. A single request can access from 1 to 4095 bytes incrementally, starting at the request's address.

During SDRAM writes, after the first write data is sent to the SDRAM Controller Subsystem with the request, any additional write data is passed to the SDRAM Controller Subsystem using a simple data valid/ready protocol at each Generic Requester Interface.

When reading from the SDRAMs, data is returned to the requester at each Generic Requester Interface using a data valid/ready protocol. The SDRAM Controller Subsystem is pipelined for highest throughput. While waiting for read data, several additional read requests can be issued to the SDRAM Controller Subsystem due to this pipelining, thus achieving highest performance. Read data is returned in order at each Generic Requester Interface

AMBA is a trademark of ARM Limited